STGW19NC60WD
STGP19NC60WD

N-channel 600V - 19A - TO-220 - TO-247
Ultra fast PowerMESH™ IGBT

Features

Type	V_{CES}	$V_{CE(sat)}$ (max)@25°C	I_C @100°C
STGP19NC60WD	600V	< 2.5V	22A
STGW19NC60WD	600V	< 2.5V	23A

- High frequency operation
- Low C_{RES} / C_{IES} ratio (no cross-conduction susceptibility)
- Very soft ultra fast recovery antiparallel diode

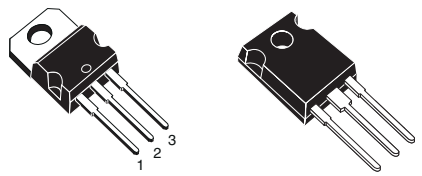

TO-220 TO-247

Description

Using the latest high voltage technology based on a patented strip layout, STMicroelectronics has designed an advanced family of IGBTs, the PowerMESH™ IGBTs, with outstanding performances. The suffix “W” identifies a family optimized for very high frequency application.

Applications

- High frequency motor controls, inverters, UPS
- HF, SMPS and PFC in both hard switch and resonant topologies

Internal schematic diagram

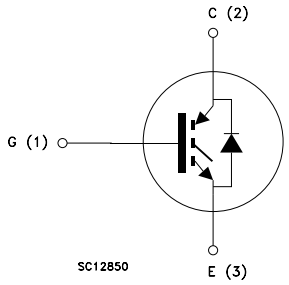

Order code

Part number	Marking	Package	Packaging
STGP19NC60WD	GP19NC60WD	TO-220	Tube
STGW19NC60WD	GW19NC60WD	TO-247	Tube

Contents

1 Electrical ratings 3

2 Electrical characteristics 4

2.1 Electrical characteristics (curves) 7

3 Test circuit 10

4 Package mechanical data 11

5 Revision history 14

1 Electrical ratings

Table 1. Absolute maximum ratings

Symbol	Parameter	Value		Unit
		TO-220	TO-247	
V_{CES}	Collector-emitter voltage (V_{GS} = 0)	600		V
I_C(1)	Collector current (continuous) at T_C = 25°C	40	42	A
I_C(1)	Collector current (continuous) at T_C = 100°C	22	23	A
I_{CL} (2)	Collector current (pulsed)	35		A
I_F	Diode RMS forward current at T_C = 25°C	12		A
V_{GE}	Gate-emitter voltage	±20		V
P_{TOT}	Total dissipation at T_C = 25°C	125		W
T_{stg}	Storage temperature	– 55 to 150		°C
T_j	Operating junction temperature			

1. Calculated according to the iterative formula:

$$I_C(T_C) = \frac{T_{JMAX} - T_C}{R_{THJ-C} \times V_{CESAT(MAX)}(T_C, I_C)}$$

2. Vclamp=480V, Tj=150°C, R_G=10Ω, V_{GE}=15V

Table 2. Thermal resistance

Symbol	Parameter	Value		Unit
		TO-220	TO-247	
Rthj-case	Thermal resistance junction-case max	1	0.95	°C/W
	Thermal resistance junction-case max diode	2.25	2.5	°C/W
Rthj-amb	Thermal resistance junction-ambient max	62.5		°C/W

2 Electrical characteristics

(T_{CASE}=25°C unless otherwise specified)

Table 3. Static

Symbol	Parameter	Test conditions	Min.	Typ.	Max.	Unit
$V_{BR(CES)}$	Collector-emitter breakdown voltage	I_C= 1mA, V_{GE}= 0	600			V
$V_{CE(sat)}$	Collector-emitter saturation voltage	V_{GE}= 15V, I_C= 12A V_{GE}= 15V, I_C=12A,Tc=125°C		2.1 1.8	2.5	V V
$V_{GE(th)}$	Gate threshold voltage	V_{CE}= V_{GE}, I_C= 250 µA	3.75		5.75	V
I_{CES}	Collector cut-off current (V_{GE} = 0)	V_{CE}= Max rating,T_C= 25°C V_{CE}= Max rating,T_C= 125°C			150 1	µA mA
I_{GES}	Gate-emitter leakage current (V_{CE} = 0)	V_{GE}= ±20V, V_{CE}= 0			±100	nA
g_{fs}	Forward transconductance	V_{CE} = 15V, I_C= 12A		10		S

Table 4. Dynamic

Symbol	Parameter	Test conditions	Min.	Typ.	Max.	Unit
C_{ies} C_{oes} C_{res}	Input capacitance Output capacitance Reverse transfer capacitance	V_{CE} = 25V, f = 1MHz, V_{GE} = 0		1180 130 26		pF pF pF
Q_g Q_{ge} Q_{gc}	Total gate charge Gate-emitter charge Gate-collector charge	V_{CE} = 390V, I_C = 5A, V_{GE} = 15V, *Figure 16*		53 10 21		nC nC nC

Table 5. Switching on/off (inductive load)

Symbol	Parameter	Test conditions	Min.	Typ.	Max.	Unit
$t_{d(on)}$ t_r $(di/dt)_{on}$	Turn-on delay time Current rise time Turn-on current slope	V_{CC} = 390V, I_C = 12A R_G= 10Ω, V_{GE}= 15V, *Figure 17*		25 7 1600		ns ns A/µs
$t_{d(on)}$ t_r $(di/dt)_{on}$	Turn-on delay time Current rise time Turn-on current slope	V_{CC} = 390V, I_C = 12A R_G= 10Ω, V_{GE}= 15V, Tj = 125°C *Figure 17*		25 8 1400		ns ns A/µs
$t_r(V_{off})$ $t_d(_{off})$ t_f	Off voltage rise time Turn-off delay time Current fall time	V_{CC} = 390V, I_C = 12A R_G= 10Ω, V_{GE}= 15V, *Figure 17*		22 90 43		ns ns ns
$t_r(V_{off})$ $t_d(_{off})$ t_f	Off voltage rise time Turn-off delay time Current fall time	V_{CC} = 390V, I_C = 12A R_G= 10Ω, V_{GE}= 15V, Tj = 125°C *Figure 17*		47 127 77		ns ns ns

Table 6. Switching energy (inductive load)

Symbol	Parameter	Test conditions	Min.	Typ.	Max.	Unit
E_{on}(1) E_{off}(2) E_{ts}	Turn-on switching losses Turn-off switching losses Total switching losses	V_{CC} = 390V, I_C = 12A R_G= 10Ω, V_{GE}= 15V, *Figure 17*		81 125 206		µJ µJ µJ
E_{on}(1) E_{off}(2) E_{ts}	Turn-on switching losses Turn-off switching losses Total switching losses	V_{CC} = 390V, I_C = 12A R_G= 10Ω, V_{GE}= 15V, Tj = 125°C *Figure 17*		161 255 416		µJ µJ µJ

1. Eon is the turn-on losses when a typical diode is used in the test circuit in *Figure 15* If the IGBT is offered in a package with a co-pak diode, the co-pack diode is used as external diode. IGBTs & Diode are at the same temperature (25°C and 125°C)
2. Turn-off losses include also the tail of the collector current

Table 7. Collector-emitter diode

Symbol	Parameter	Test conditions	Min.	Typ.	Max.	Unit
V_f	Forward on-voltage	I_f = 12A I_f = 12A, Tj = 125°C		1.9 1.5	2.5	V V
t_{rr} Q_{rr} I_{rrm}	Reverse recovery time Reverse recovery charge Reverse recovery current	I_f = 12A,V_R = 50V, Tj = 25°C, di/dt = 100 A/µs *Figure 18*		31 30 2		ns nC A
t_{rr} Q_{rr} I_{rrm}	Reverse recovery time Reverse recovery charge Reverse recovery current	I_f = 12A,V_R = 50V, Tj =125°C, di/dt = 100A/µs *Figure 18*		59 102 4		ns nC A

2.1 Electrical characteristics (curves)

Figure 1. Output characteristics

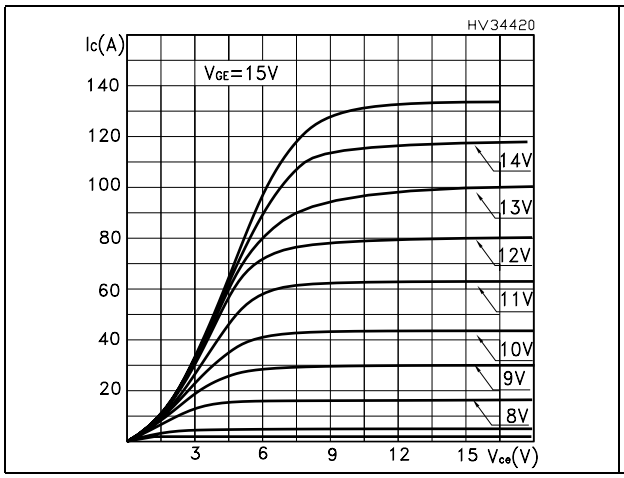

Figure 2. Transfer characteristics

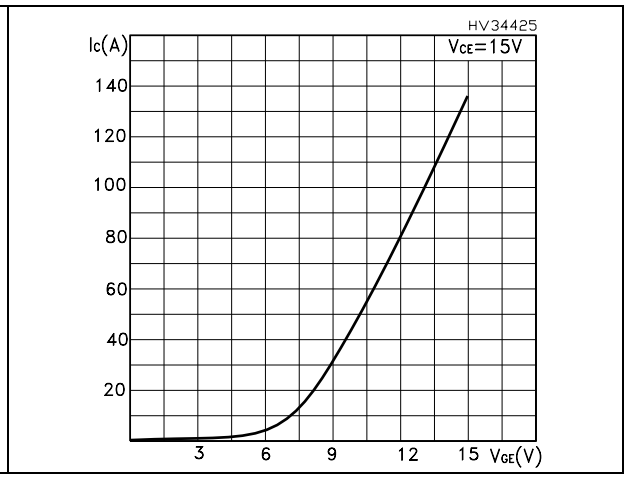

Figure 3. Transconductance

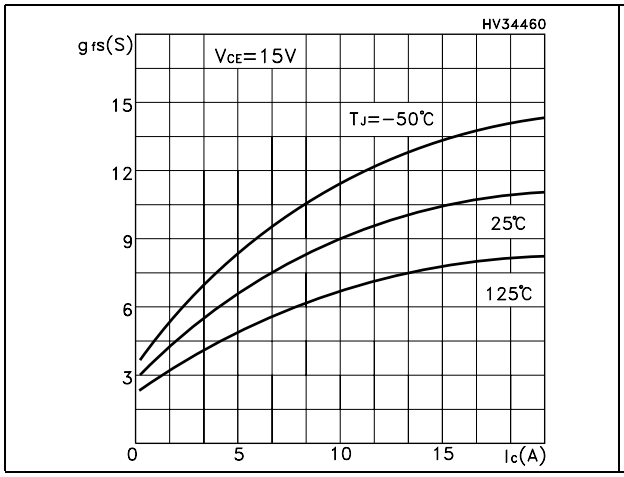

Figure 4. Collector-emitter on voltage vs temperature

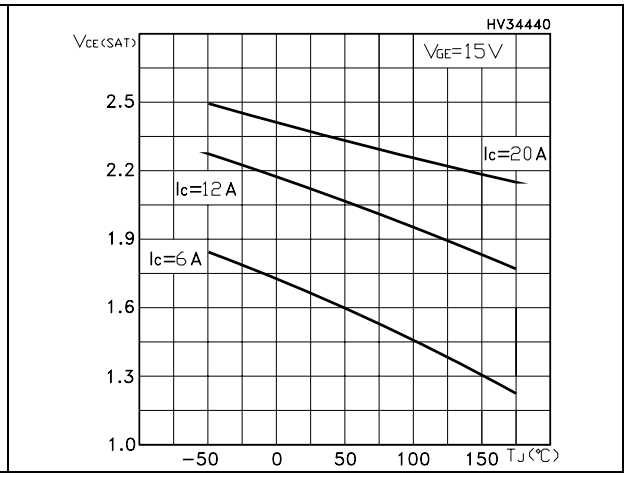

Figure 5. Gate charge vs gate-source voltage

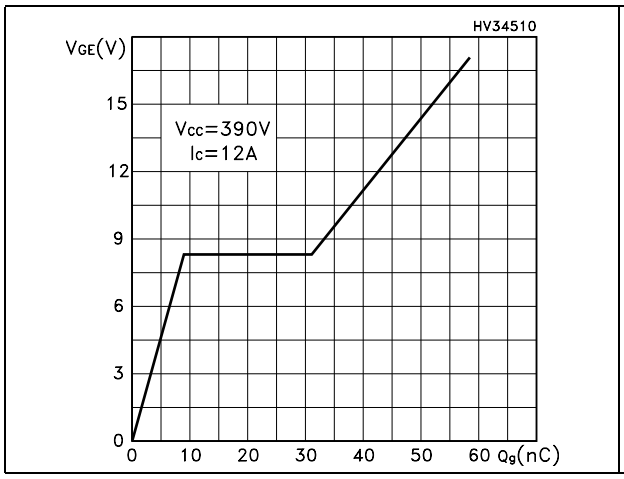

Figure 6. Capacitance variations

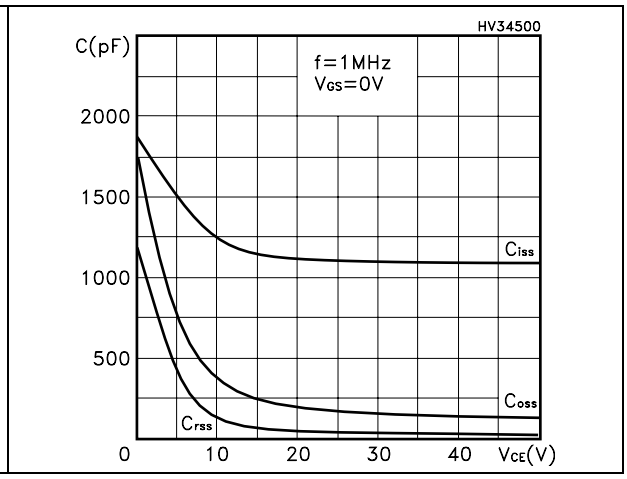

Figure 7. Normalized gate threshold voltage vs temperature

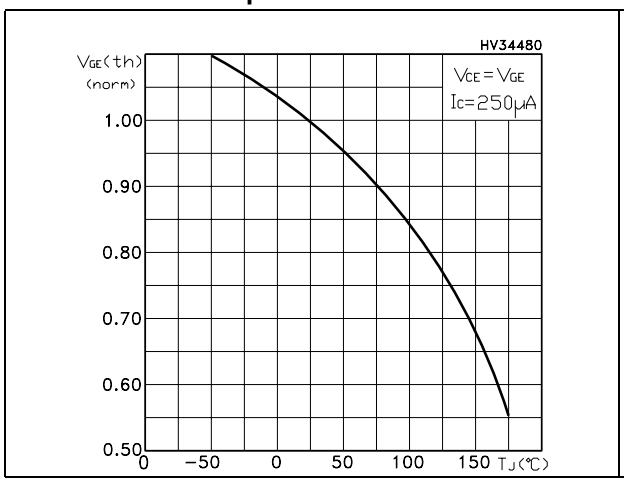

Figure 8. Collector-emitter on voltage vs collector current

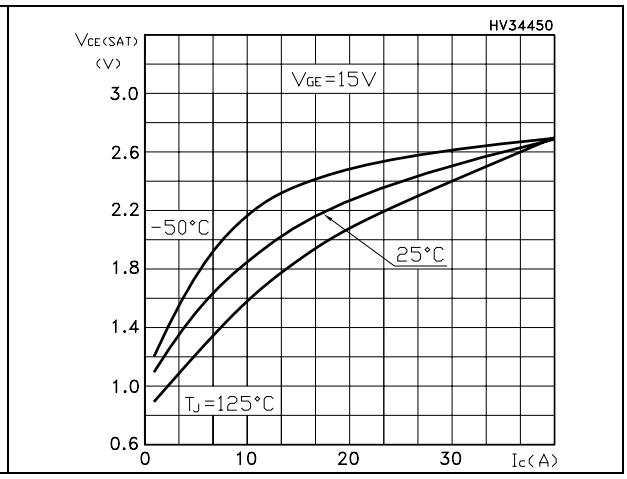

Figure 9. Normalized breakdown voltage vs temperature

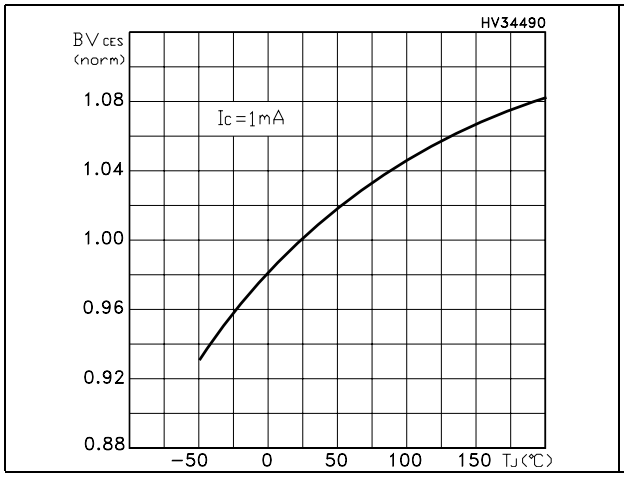

Figure 10. Switching losses vs temperature

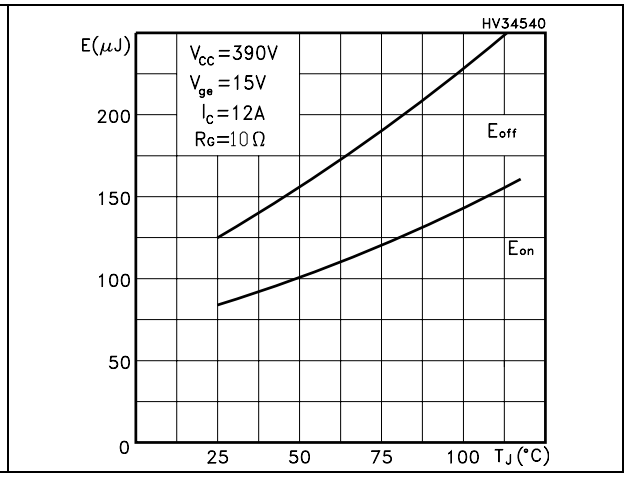

Figure 11. Switching losses vs gate resistance

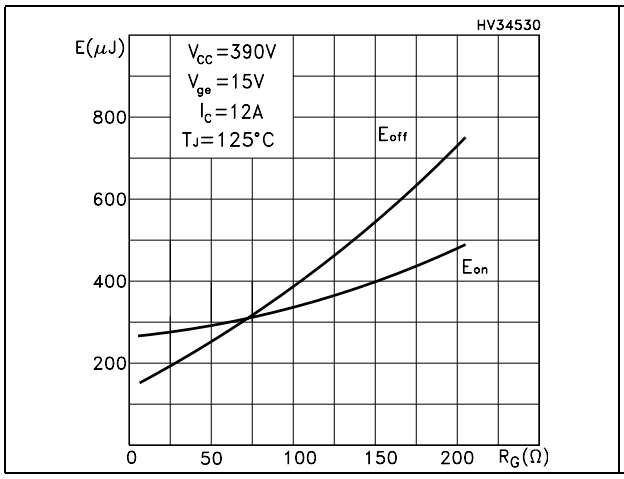

Figure 12. Switching losses vs collector current

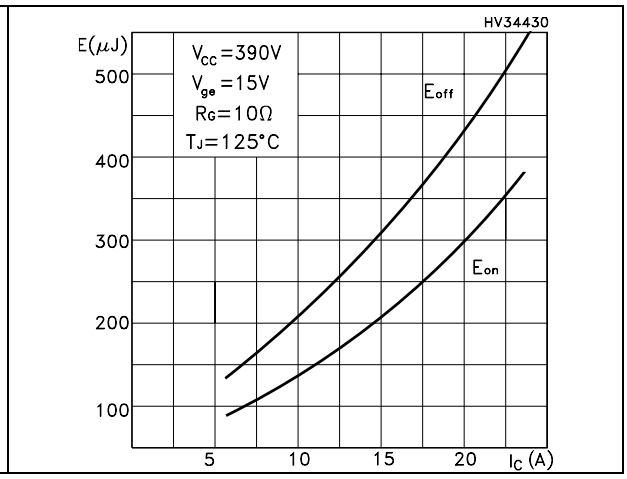

Figure 13. Turn-off SOA

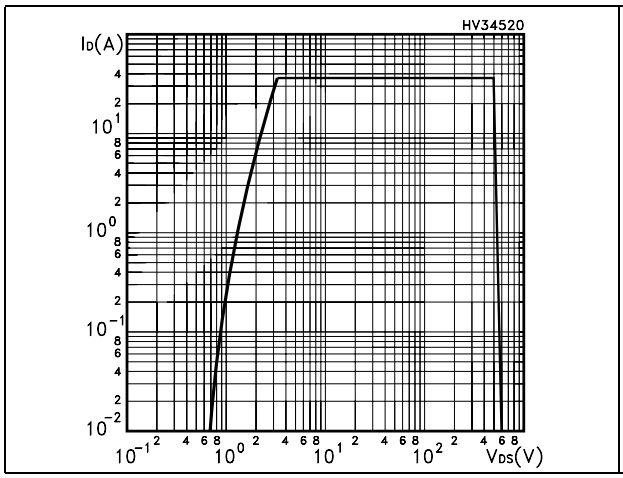

Figure 14. Emitter-collector diode characteristics

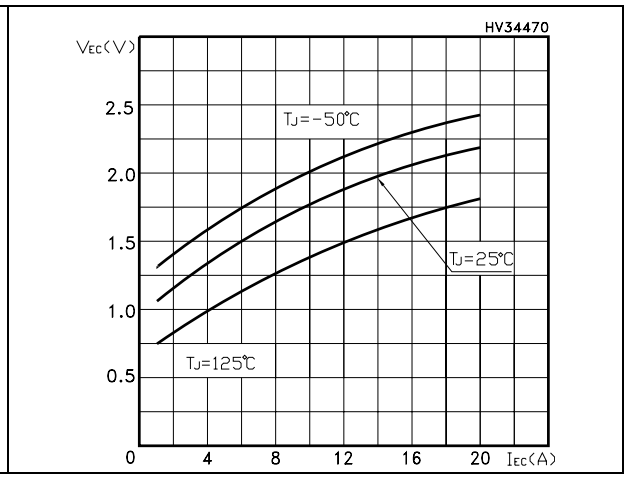

3 Test circuit

Figure 15. Test circuit for inductive load switching

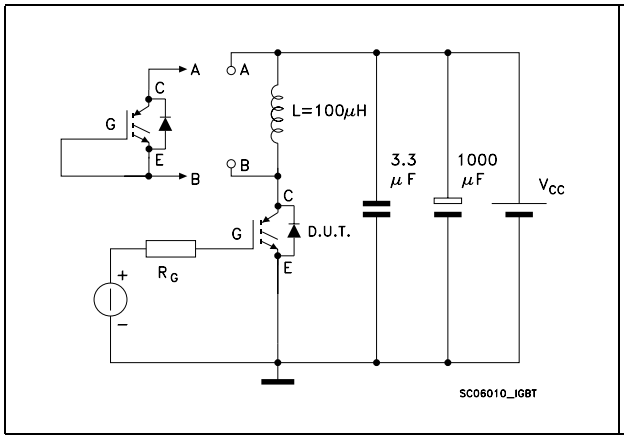

Figure 16. Gate charge test circuit

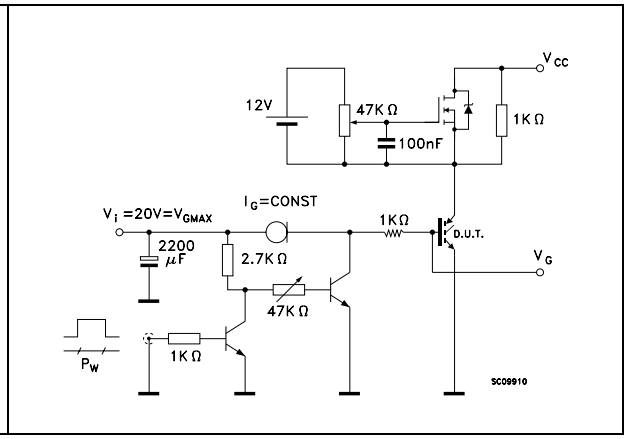

Figure 17. Switching waveform

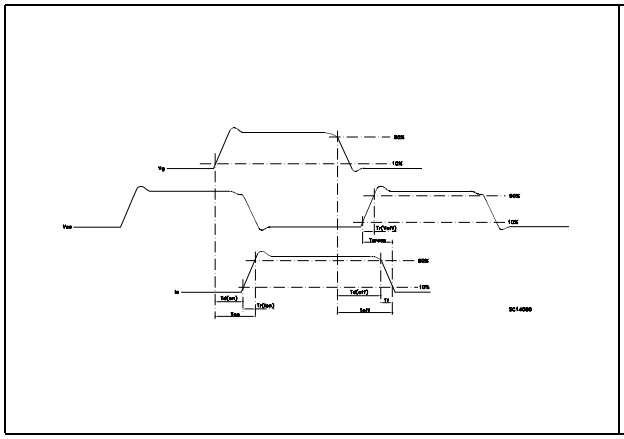

Figure 18. Diode recovery time waveform

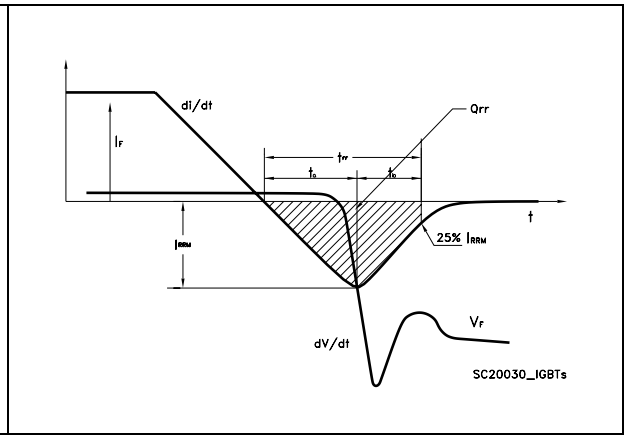

4 Package mechanical data

In order to meet environmental requirements, ST offers these devices in ECOPACK® packages. These packages have a Lead-free second level interconnect. The category of second level interconnect is marked on the package and on the inner box label, in compliance with JEDEC Standard JESD97. The maximum ratings related to soldering conditions are also marked on the inner box label. ECOPACK is an ST trademark. ECOPACK specifications are available at: *www.st.com*

TO-220 mechanical data

Dim	mm			inch		
	Min	Typ	Max	Min	Typ	Max
A	4.40		4.60	0.173		0.181
b	0.61		0.88	0.024		0.034
b1	1.14		1.70	0.044		0.066
c	0.49		0.70	0.019		0.027
D	15.25		15.75	0.6		0.62
D1		1.27			0.050	
E	10		10.40	0.393		0.409
e	2.40		2.70	0.094		0.106
e1	4.95		5.15	0.194		0.202
F	1.23		1.32	0.048		0.051
H1	6.20		6.60	0.244		0.256
J1	2.40		2.72	0.094		0.107
L	13		14	0.511		0.551
L1	3.50		3.93	0.137		0.154
L20		16.40			0.645	
L30		28.90			1.137	
∅P	3.75		3.85	0.147		0.151
Q	2.65		2.95	0.104		0.116

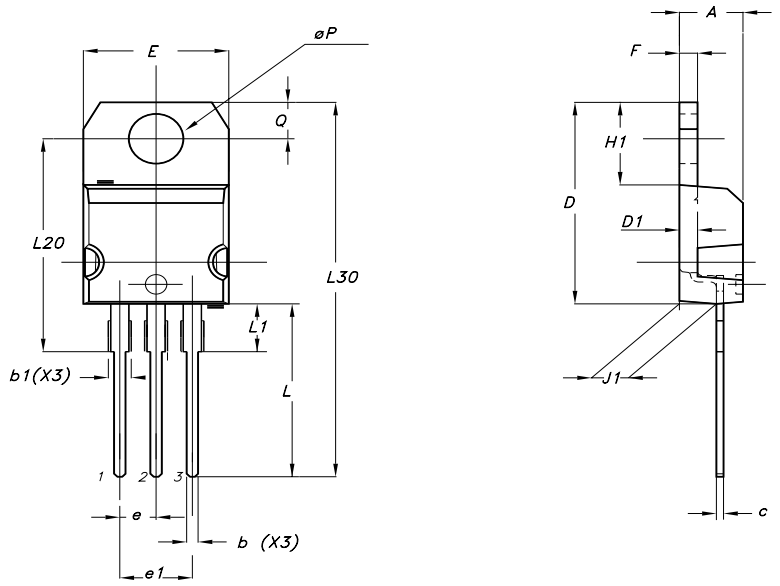

TO-247 MECHANICAL DATA

DIM.	mm.			inch		
	MIN.	TYP	MAX.	MIN.	TYP.	MAX.
A	4.85		5.15	0.19		0.20
A1	2.20		2.60	0.086		0.102
b	1.0		1.40	0.039		0.055
b1	2.0		2.40	0.079		0.094
b2	3.0		3.40	0.118		0.134
c	0.40		0.80	0.015		0.03
D	19.85		20.15	0.781		0.793
E	15.45		15.75	0.608		0.620
e		5.45			0.214	
L	14.20		14.80	0.560		0.582
L1	3.70		4.30	0.14		0.17
L2		18.50			0.728	
øP	3.55		3.65	0.140		0.143
øR	4.50		5.50	0.177		0.216
S		5.50			0.216	

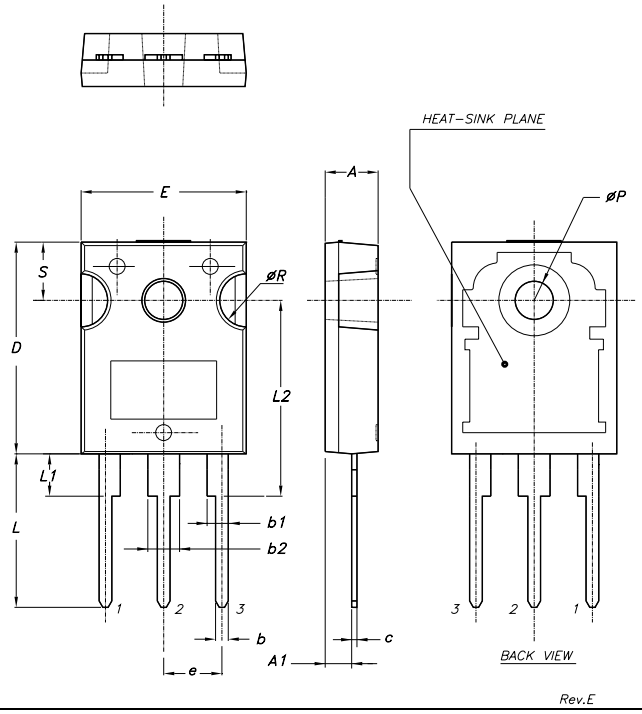

5 Revision history

Table 8. Revision history

Date	Revision	Changes
04-Oct-2006	1	Initial release.
13-Apr-2007	2	Final version
08-May-2007	3	Added TO-247

Please Read Carefully:

Information in this document is provided solely in connection with ST products. STMicroelectronics NV and its subsidiaries (“ST”) reserve the right to make changes, corrections, modifications or improvements, to this document, and the products and services described herein at any time, without notice.

All ST products are sold pursuant to ST’s terms and conditions of sale.

Purchasers are solely responsible for the choice, selection and use of the ST products and services described herein, and ST assumes no liability whatsoever relating to the choice, selection or use of the ST products and services described herein.

No license, express or implied, by estoppel or otherwise, to any intellectual property rights is granted under this document. If any part of this document refers to any third party products or services it shall not be deemed a license grant by ST for the use of such third party products or services, or any intellectual property contained therein or considered as a warranty covering the use in any manner whatsoever of such third party products or services or any intellectual property contained therein.

UNLESS OTHERWISE SET FORTH IN ST’S TERMS AND CONDITIONS OF SALE ST DISCLAIMS ANY EXPRESS OR IMPLIED WARRANTY WITH RESPECT TO THE USE AND/OR SALE OF ST PRODUCTS INCLUDING WITHOUT LIMITATION IMPLIED WARRANTIES OF MERCHANTABILITY, FITNESS FOR A PARTICULAR PURPOSE (AND THEIR EQUIVALENTS UNDER THE LAWS OF ANY JURISDICTION), OR INFRINGEMENT OF ANY PATENT, COPYRIGHT OR OTHER INTELLECTUAL PROPERTY RIGHT.

UNLESS EXPRESSLY APPROVED IN WRITING BY AN AUTHORIZED ST REPRESENTATIVE, ST PRODUCTS ARE NOT RECOMMENDED, AUTHORIZED OR WARRANTED FOR USE IN MILITARY, AIR CRAFT, SPACE, LIFE SAVING, OR LIFE SUSTAINING APPLICATIONS, NOR IN PRODUCTS OR SYSTEMS WHERE FAILURE OR MALFUNCTION MAY RESULT IN PERSONAL INJURY, DEATH, OR SEVERE PROPERTY OR ENVIRONMENTAL DAMAGE. ST PRODUCTS WHICH ARE NOT SPECIFIED AS "AUTOMOTIVE GRADE" MAY ONLY BE USED IN AUTOMOTIVE APPLICATIONS AT USER’S OWN RISK.

Resale of ST products with provisions different from the statements and/or technical features set forth in this document shall immediately void any warranty granted by ST for the ST product or service described herein and shall not create or extend in any manner whatsoever, any liability of ST.

ST and the ST logo are trademarks or registered trademarks of ST in various countries.

Information in this document supersedes and replaces all information previously supplied.

The ST logo is a registered trademark of STMicroelectronics. All other names are the property of their respective owners.

© 2007 STMicroelectronics - All rights reserved

STMicroelectronics group of companies

Australia - Belgium - Brazil - Canada - China - Czech Republic - Finland - France - Germany - Hong Kong - India - Israel - Italy - Japan - Malaysia - Malta - Morocco - Singapore - Spain - Sweden - Switzerland - United Kingdom - United States of America

www.st.com